COSMO roll towel dispenser, white

Code: LCP5010B
EAN: 5901764293965



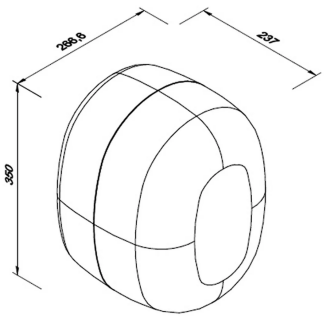

Faneco COSMO roll towel dispenser in white. Designed for wall mounting and dispensing rolls of paper towels.

Technical information

About the product

Collection	COSMO
Product type	Roll paper towel dispensers
Category	Towel dispenser
Brand	Faneco
EAN	5901764293965

Refills and consumables

Towel type	Roll
Max. roll diameter (cm)	20 cm
Roll width (cm)	21.0 cm

Features and functions

Inspection window	Yes

Appearance and finish

Color	White/transparent

Materials

Material	Polycarbonate

Mechanism and operation

Dispensing type	Manual
Closing Mechanism	Plastic

Dimensions and weight

Pipe diameter (mm)	32.0 mm
Height (mm)	350.0
Width (mm)	266.6

Depth (mm)	237.0
Weight (kg)	1.335 kg

Mounting and connections

Mounting method	Wall

Warranty

Warranty (years)	2.0
Warranty Type	door-to-door

Logistics – unit carton

Carton Height (mm)	359.0 mm
Carton Depth (mm)	242.0 mm
Carton weight	1.56 kg

Logistics – master carton

Units per master carton	1.0

Description

The COSMO roll towel dispenser is a wall-mounted dispenser designed for roll paper towels, used in public toilets, educational institutions and facilities exposed to intensive use. Made of durable polycarbonate, it has a vandal-resistant housing with rounded edges, which facilitates cleaning and increases safety of use. Transparent elements allow you to control the level of towels, and the narrow spout helps reduce their excessive wear.

View product page
https://faneco.com/en/produkt/cosmo-roll-towel-dispenser-white/