Faneco DARK liquid soap dispenser 1000 ml, black, ABS

Code: S1000PGB
EAN: 5901764296799



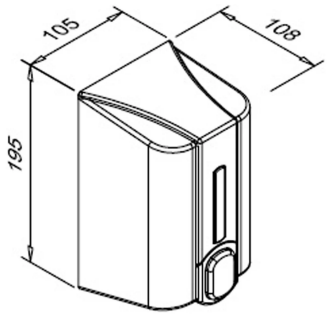

*]:pointer-events-auto yFTUi90U scroll-mb-[calc(var(--scroll-root-safe-area-inset-bottom,0px)+var(--thread-response-height))] scroll-mt-[calc(var(--header-height)+min(200px,max(70px,20svh)))]" dir="auto" data-turn-id="49012402-a33e-40be-a8a5-3c501f78bdac" data-turn-id-container="49012402-a33e-40be-a8a5-3c501f78bdac" data-testid="conversation-turn-416" data-turn="assistant">

The Faneco DARK liquid soap dispenser is made of black ABS plastic. The model is equipped with a 1000 ml tank, designed for repeated filling directly from the canister. A window in the housing allows you to check the soap level, and access to the interior is secured by a lock opened with a plastic key.

Technical information

About the product

Collection	DARK
Product type	Liquid soap dispenser, manual, for intensive use
Category	Soap and liquid dispensers
Brand	Faneco
EAN	5901764296799

Refills and consumables

Liquid type	Liquid soap
Refill system	From a canister

Features and functions

Drip-free	Yes
Inspection window	Yes

Appearance and finish

Color	Black

Materials

Material	ABS plastic

Mechanism and operation

Dispensing type	Manual
Activation type	Button
Closing Mechanism	Lock + plastic key

Dimensions and weight

Capacity (ml)	1000.0 ml
Height (mm)	195.0mm
Width (mm)	105.0
Depth (mm)	108.0mm
Weight (kg)	0.33 kg

Power supply

Power supply	None

Mounting and connections

Mounting method	Wall

Set contents

Installation kit	Yes

Warranty

Warranty (years)	2
Warranty Type	door-to-door

Logistics – master carton

Units per master carton	30
Master carton height	590.0 mm
Master carton depth	400.0 mm
Master carton width	330.0 mm
Master carton volume (m^3)	0,0776 m^3
Master carton weight	10.0 kg

Description

The dispenser is 195 mm high, 105 mm wide and 108 mm deep, and its weight is 0.33 kg. The soap is administered manually using an ergonomic button. The mechanism is equipped with a non-spill valve and a spring made of hardened steel.

The product belongs to the DARK collection, which includes equipment made of black plastic. The dispenser is covered by a 2-year door-to-door warranty.

Parameters

- **Capacity 1000 ml**– a liter tank is intended for liquid soap.
- **Manual dosing**– soap is administered using an ergonomic button.
- **Non-spill valve**– limits soap dripping after dispensing.
- **Control window**– allows you to check the soap level in the tank.
- **Filling directly from the canister**– allows for repeated refilling of the tank without using dedicated cartridges.
- **Hardened steel spring**– the dosing mechanism element is made of hardened steel.
- **Material**– ABS plastic.
- **Color**- black.
- **Key lock**– a lock and a plastic key secure access to the tank.
- **Height**– 195 mm.
- **Width**– 105 mm.
- **Depth**– 108 mm.
- **Product weight**– 0.33 kg.
- **Guarantee**– 2 years door-to-door.

View product page
https://faneco.com/en/produkt/faneco-dark-liquid-soap-dispenser-1000-ml-black-abs/

Product code: S1000PGB
Faneco