Faneco Floor-Mounted Folding Disabled Grab Bar, 70 cm, Ø 32 mm, White, Steel

Code: S32UUWCW77SWB
EAN: 5901764293262



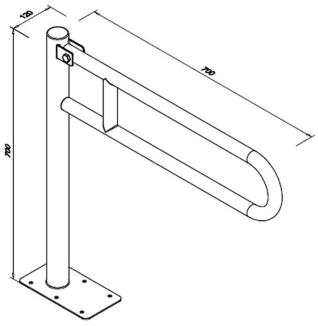

The Faneco tilting freestanding grab bar, measuring 700 × 700 mm, is designed for restrooms adapted for people with disabilities and for locations where it is not possible to mount a grab bar to the wall. The model is made of carbon steel coated with white epoxy paint and features a curved tube with a diameter of Ø32 mm. The grab bar tilts upward, and the floor mounting with six screws ensures a stable installation with a maximum load capacity of 120 kg.

Technical information

About the product

Product type	Folding grab bar
Category	Grab Bars
Brand	Faneco
EAN	5901764293262

Application

Intended use	Accessible bathrooms

Features and functions

Max. load (kg)	120.0 kg

Appearance and finish

Color	White
Handrail shape	arched
Coating	Farba epoksydowa
Coating thickness (µm)	70.0 µm

Materials

Material	Carbon steel
Grab Bar Steel Thickness (mm)	1.5 mm
Support Steel Thickness (mm)	5.0 mm
Steel joining	TIG welding

Dimensions and weight

Pipe diameter (mm)	32.0 mm
Height (mm)	700.0mm
Width (mm)	700.0
Depth (mm)	120.0 mm
Grab Bar Length (mm)	700.0 mm
Weight (kg)	5.0 kg
Additional dimensions	Dimensions: 700 × 700 × 120 mm

Mounting and connections

Installation orientation	Vertical
Fixing type	to the floor
Mounting method	floor
Mounting hole diameter (mm)	8.5 mm
Number of mounting points	6
Wall plug size (mm)	10mm x 80mm
Screw size (mm)	8mm x 90mm

Set contents

Wall plugs included	Yes
Screws included	Yes

Warranty

Warranty (years)	2
Warranty Type	door-to-door

Logistics – unit carton

Carton Height (mm)	850.0 mm
Carton Depth (mm)	140.0 mm
Carton weight	5.2 kg

Description

A tilting standing grab bar designed for floor mounting in restroom areas, intended for locations where wall mounting is not possible. The grab bar provides people with mobility issues with stable and secure support while using the toilet.

The handrail is made of **carbon steel coated with white epoxy paint**. The tube has a diameter of Ø32 mm and a wall thickness of 1.5 mm. The steel components are joined using the TIG welding method.

- **Type: freestanding, arched folding handrail**
- **Tilt: Upward**
- **Length: 700 mm**
- **Height: 700 mm**
- **Material: carbon steel**
- **Finish: white epoxy paint**
- **Pipe diameter: Ø32 mm**
- **Pipe thickness: 1.5 mm**
- **Bracket thickness: 5 mm**
- **Maximum load: 120 kg**
- **Joining components: TIG welding**
- **Mounting: floor-mounted, 6-screw**
- **Diameter of mounting holes: Ø8.5 mm**

Product code: S32UUWCW77SWB
Faneco

- **Overall dimensions: 700 × 700 × 120 mm**
- **Weight: 5 kg**

View product page
https://faneco.com/en/produkt/faneco-floor-mounted-folding-disabled-grab-bar-70-cm-o-32-mm-white-steel/

Product code: S32UUWCW77SWB
Faneco