Faneco PASSAT V 1350 W hand dryer, black, steel

Code: D1350SCBB
EAN: 5901764297109



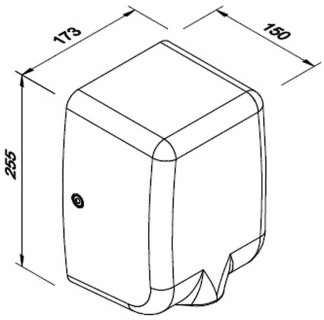

Faneco PASSAT V hand dryer with a power of 1350 W, made of brushed 304 stainless steel in black. Activated automatically by a photocell in the range of 5–15 cm. Drying time 10–12 s, air speed 100 m/s, air flow 130 m³/h. Equipped with a cold air function. Noise level 70 dB. Degree of protection IPX1.

Technical information

About the product

Collection	PASSAT
Product type	Hands-Under Hand Dryers
Category	Hand dryers
Brand	Faneco
EAN	5901764297109

Compliance

IP rating	IPX1

Application

Intended use	toilets with medium and heavy traffic

Operating parameters

Power (W)	1350.0 W
Min. drying time (s)	10.0
Max. drying time (s)	12.0
Min. sensor range (cm)	5.0
Max. sensor range (cm)	15.0 cm
Min. temperature (°C)	40.0
Max. temperature (°C)	40.0
Noise level (dB)	70.0 dB
Air speed (m/s)	100.0

Features and functions

Cool air function	Yes

Appearance and finish

Color	Black
Finish	Malowanie proszkowe

Materials

Material	Brushed AISI 304 stainless steel
Housing material	Brushed AISI 304 stainless steel

Mechanism and operation

Activation type	sensor

Dimensions and weight

Height (mm)	255.0
Width (mm)	173.0
Depth (mm)	150.0
Weight (kg)	3.0 kg
Cable length (mm)	700.0 mm

Mounting and connections

Mounting method	wall-mounted

Warranty

Warranty (years)	2.0
Warranty Type	door-to-door

Logistics – unit carton

Carton Height (mm)	260.0 mm
Carton Depth (mm)	152.0 mm
Carton weight	3.75 kg

Logistics – master carton

Units per master carton	4.0
Master carton height	450.0 mm
Master carton depth	420.0 mm
Master carton width	335.0 mm
Master carton volume (m^3)	0.063
Master carton weight	15.0 kg

Description

PASSAT V is**efficient automatic hand dryer in a solid, powder-coated 304 stainless steel housing**.

It was designed for public bathrooms where the device is used frequently and must combine fast operation with durability and simple operation.

A specially designed nozzle concentrates an air stream reaching a speed of up to**100 m/s**, so you can dry your hands in just a few minutes**10-12 seconds**. The power of 1350 W ensures high efficiency without the need to use a device with very high energy consumption.

- **Drying in 10-12 seconds**– a short cycle ensures convenience for users and efficient operation of the toilet during higher traffic volumes.
- **Air speed 100 m/s**– a strong, concentrated stream effectively removes water from the surface of the hand.

- **Power 1350 W**– a good combination of high efficiency and economical operation of the device.
- **Specially designed nozzle**– directs an intense stream of air directly to the hands, increasing drying efficiency.
- **304 stainless steel**– durable casing works well in intensively used sanitary spaces.
- **Possibility to turn on cold air**– allows you to use the dryer without heating the air and additionally reduce energy consumption.
- **Automatic startup**– the photocell detects hands from a distance of 5-15 cm, making operation completely contactless.
- **Air discharge 130 m³/h**– ensures intense and effective flow during the entire drying cycle.
- **Compact, steel construction**– with dimensions of 255 × 173 × 150 mm, the dryer does not take up much space on the wall.
- **Matte finish**– brushed steel gives the device a professional, timeless look and easily matches other bathroom equipment.
- **2 years door-to-door warranty**– convenient warranty service ensures additional safety of use.

PASSAT V is a solution for facilities that need a fast and solid dryer without unnecessary accessories. An air stream with a speed of 100 m/s, drying in 10-12 seconds and a durable 304 stainless steel housing create a practical set of features for offices, hotels, restaurants, schools, commercial and service facilities and other public bathrooms.

View product page
https://faneco.com/en/produkt/faneco-passat-v-1350-w-hand-dryer-black-steel/

Product code: D1350SCBB
Faneco