Faneco POP foam soap dispenser 1000 ml, white, ABS

Code: SF1000PGWG
EAN: 5901764297666



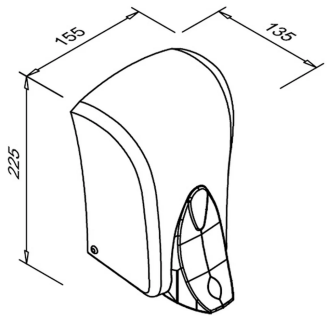

The Faneco POP foam soap dispenser is made of ABS plastic in white and gray colors. The model is equipped with a 1000 ml tank, refilled directly from the canister. A transparent window in the housing allows you to check the soap level, and a key lock secures access to the inside of the dispenser.

Technical information

About the product

Collection	POP
Product type	Foam soap dispenser, manual, for facilities with strict hygiene requirements
Category	Soap and liquid dispensers
Brand	Faneco
EAN	5901764297666

Refills and consumables

Liquid type	Foam soap
Refill system	From a canister

Features and functions

Additional features	Hardened steel spring
Drip-free	Yes
Inspection window	Yes

Appearance and finish

Color	White / Gray

Materials

Material	ABS plastic

Mechanism and operation

Dispensing type	Manual
Activation type	Button
Closing Mechanism	Lock + plastic key

Dimensions and weight

Capacity (ml)	1000.0 ml
Height (mm)	220.0mm
Width (mm)	155.0
Depth (mm)	125.0mm
Weight (kg)	0.4 kg

Power supply

Power supply	None

Mounting and connections

Mounting method	Wall

Set contents

Installation kit	Yes

Warranty

Warranty (years)	2
Warranty Type	door-to-door

Logistics – unit carton

Carton Height (mm)	230.0 mm
Carton Width (mm)	160.0 mm
Carton Depth (mm)	130.0 mm
Carton weight	0.583 kg

Logistics – master carton

Units per master carton	18
Master carton height	490.0 mm
Master carton depth	460.0 mm
Master carton width	440.0 mm
Master carton volume (m^3)	0,099 m^3
Master carton weight	10.5 kg

Description

The dispenser is 220 mm high, 155 mm wide and 125 mm deep, and its weight is 0.4 kg. The soap is administered manually using an ergonomic button. The system uses a non-spill valve and a spring made of hardened steel.

The product belongs to the POP collection and is certified by the National Institute of Hygiene. Faneco indicates its use, among others: in public toilets, hospitals, hotels, schools, restaurants and offices. The product is covered by a 2-year door-to-door warranty.

Parameters

- **Capacity 1000 ml**– liter tank for foam soap.
- **Manual dosing**– soap is administered using an ergonomic button.
- **Non-spill valve**– limits soap dripping after dispensing.
- **Control window**– allows you to check the soap level in the tank.
- **Filling directly from the canister**– does not require the use of dedicated disposable cartridges.
- **Hardened steel spring**– the dosing mechanism element is made of hardened steel.
- **Material**– ABS plastic.
- **Color**– white / gray.

Product code: SF1000PGWG
Faneco

- **Key lock**– secures access to the tank.
- **Height**– 220 mm.
- **Width**– 155 mm.
- **Depth**– 125 mm.
- **Product weight**– 0.4 kg.
- **PZH certificate**– information confirmed in the product description.
- **Guarantee**– 2 years door-to-door.

View product page
https://faneco.com/en/produkt/faneco-pop-foam-soap-dispenser-1000-ml-white-abs/

Product code: SF1000PGWG
Faneco