HIT Antifinger toilet paper container, brushed steel

Code: J25SJAF
EAN: 5901764298380



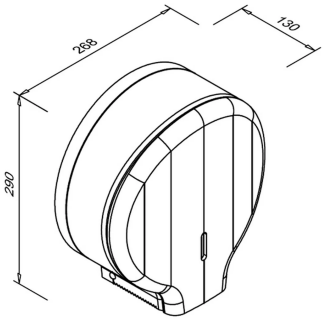

The Faneco HIT ANTIFINGER toilet paper container is made of brushed AISI 430 stainless steel with an antifinger coating and a matte finish. It is intended for most mini JUMBO paper rolls with a diameter of 18 to 23 cm. There is a window in the front that allows you to check the paper level.

Technical information

About the product

Collection	HIT
Product type	Container
Category	Toilet paper dispenser
Brand	Faneco
EAN	5901764298380

Refills and consumables

Compatible with Mini Jumbo	Yes
Paper type	Roll
Min. roll diameter (cm)	18.0 cm
Max. roll diameter (cm)	23.0 cm

Features and functions

Inspection window	Yes

Appearance and finish

Color	Steel
Finish	Matowe
Coating	Antifinger

Materials

Material	AISI 430 stainless steel brushed

Mechanism and operation

Dispensing type	Manual
Closing Mechanism	metal

Dimensions and weight

Height (mm)	260.0mm
Width (mm)	240.0
Depth (mm)	100.0mm
Pin Diameter (mm)	43 mm
Weight (kg)	1.4 kg

Mounting and connections

Mounting method	Wall

Warranty

Warranty (years)	2
Warranty Type	door-to-door

Logistics – unit carton

Carton Height (mm)	270.0 mm
Carton Depth (mm)	110.0 mm
Carton weight	1.45 kg

Logistics – master carton

Units per master carton	10
Master carton volume (m^3)	0.1323 m^3
Master carton weight	14.5 kg

Description

The model is 260 mm high, 240 mm wide and 100 mm deep, and its weight is 1.4 kg. It is compatible with rollers with a shaft diameter of 43 mm.

Access to the interior is secured by a metal lock opened with a key. The antifinger coating limits the visibility of fingerprints on the steel surface. The product is covered by a 2-year door-to-door warranty.

Parameters

- ***Material:***430 brushed stainless steel with antifinger coating
- ***Paper Size:***roll Ø 180–230 mm, spindle Ø 43 mm
- ***Close:***metal lock and key
- ***Height:***260mm
- ***Width:***240mm
- ***Depth:***100mm
- ***Product weight:***1.4kg
- ***Guarantee:***2 years door-to-door

View product page
https://faneco.com/en/produkt/hit-antifinger-toilet-paper-container-brushed-steel/

Product code: J25SJAF
Faneco