POP S toilet paper container, white, ABS

Code: J18PGWG
EAN: 5901764290124



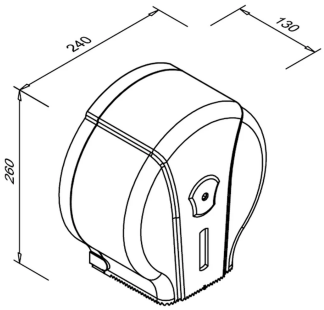

The Faneco POP S toilet paper container is a wall-mounted dispenser made of ABS plastic in white and gray colors. It is intended for paper rolls with a diameter of 18 to 23 cm. There is a transparent window in the front of the housing that allows you to check the paper level.

Technical information

About the product

Collection	POP
Product type	Container
Category	Toilet paper dispenser
Brand	Faneco
EAN	5901764290124

Refills and consumables

Jumbo Rolls	Yes
Paper type	Roll
Min. roll diameter (cm)	18.0 cm
Max. roll diameter (cm)	23.0 cm

Features and functions

Inspection window	Yes

Appearance and finish

Color	White / Gray

Materials

Material	ABS plastic

Mechanism and operation

Dispensing type	Manual
Closing Mechanism	Plastic

Dimensions and weight

Height (mm)	260.0mm

Width (mm)	240.0
Depth (mm)	130.0 mm
Weight (kg)	0.6 kg

Mounting and connections

Mounting method	Wall

Warranty

Warranty (years)	2.0
Warranty Type	door-to-door

Logistics – unit carton

Carton Height (mm)	265.0 mm
Carton Depth (mm)	135.0 mm
Carton weight	0.75 kg

Logistics – master carton

Units per master carton	10.0
Master carton volume (m^3)	0.087 m^3
Master carton weight	7,5 kg

Description

The model is 260 mm high, 240 mm wide and 130 mm deep, and its weight is 0.6 kg. It is compatible with rollers with a shaft diameter of 45 or 55 mm. The serrated edge makes it easier to tear off the paper.

Access to the interior is secured by a lock opened with a plastic key. The product is covered by a 2-year door-to-door warranty.

Parameters

- ***Material:***ABS plastic
- ***Color:***white/gray
- ***Paper Size:***roll Ø 180–230 mm, shank Ø 45 / 55 mm
- ***Close:***lock and plastic key
- ***Height:***260mm
- ***Width:***240mm
- ***Depth:***130mm
- ***Product weight:***0.6 kg
- ***Guarantee:***2 years door-to-door

View product page
https://faneco.com/en/produkt/pop-s-toilet-paper-container-white-abs/

Product code: J18PGWG
Faneco