ZZ Towel Dispenser Faneco HIT Matte Steel

Code: P600SJB
EAN: 5901764292302



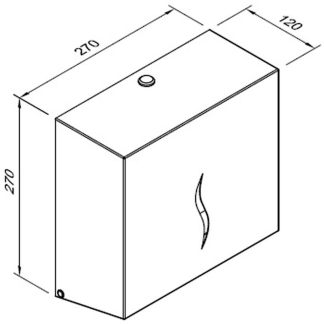

ZZ Faneco HIT towel dispenser made of brushed stainless steel 430 with a matte finish. Capacity 600 sheets. Equipped with a window for checking the paper level and a lock with a metal key.

Technical information

About the product

Collection	HIT
Product type	ZZ Towel Dispensers
Category	Towel Dispenser
Brand	Faneco
EAN	5901764292302

Refills and consumables

Towel type	ZZ
Capacity (number of sheets)	600.0

Features and functions

Inspection window	Yes

Appearance and finish

Color	Steel
Finish	Matowe

Materials

Material	AISI 430 stainless steel brushed

Mechanism and operation

Closing Mechanism	Metal

Dimensions and weight

Height (mm)	270.0
Width (mm)	270.0
Depth (mm)	120.0

Weight (kg)	1.8 kg

Mounting and connections

Mounting method	Wall Mounted

Warranty

Warranty (years)	2.0
Warranty Type	door-to-door

Logistics – master carton

Units per master carton	6.0

Description

The ZZ Faneco HIT Towel Dispenser is a wall-mounted dispenser designed for folding paper towels, used in public toilets, offices and high-traffic facilities. Made of brushed stainless steel with a matte finish, it has a durable housing that resists daily use and is easy to clean. The model is equipped with a towel level control window and a metal lock with a key, which streamlines servicing and protects the insert from unauthorized access.

View product page
https://faneco.com/en/produkt/zz-faneco-hit-towel-dispenser-brushed-steel/